ORDER NO. RD8012-1823C

Service Manual

Radio Cassette

RX-5180

FM-AM-FM Stereo Cassette Recorder

RX-1810 MECHANISM SERIES

■ SPECIFICATIONS

Power Requirement:	AC; 120 V 60 Hz Battery, 9 V (six "C" size dry batteries) (Panasonic UM-2 or equivalent)
Power Consumption:	15 W
Power Output:	7.5 W (3.75 W×2) . . . RMS (max.)
Frequency Range:	50~10,000 Hz
Recording System:	AC bias, Magnet erase
Tape Speed:	4.8 cm/s ($1\frac{7}{8}$ ips)
Program Time:	1 hour with C-60 cassette tape
Track System:	4-track 2-channel stereo recording and playback
Input:	MIC; sensitivity 0.25 mV/applicable microphone impedance 200~600Ω LINE IN; sensitivity 250 mV/50 kΩ over DC IN; 9 V
Output:	LINE OUT; sensitivity 0.42 V/10 kΩ under EXT. SP; 3~8Ω HEADPHONE; 8Ω
Speaker:	10 cm (4")×2 PM Dynamic speaker (3Ω)
Radio Frequency Range:	FM; 88~108 MHz AM; 525~1610 kHz
Intermediate Frequency:	FM; 10.7 MHz AM; 455 kHz
Sensitivity:	FM; 2.2μV/50 mW output AM; 70μV/m/50 mW output
Dimensions:	35.0cm(W)×14.4cm(H)×8.2cm(D) [$13\frac{13}{16}$"(W)×$5\frac{11}{16}$"(H)×$3\frac{1}{4}$"(D)]
Weight:	2.6 kg (5 lb. 12 oz) without batteries

Specifications are subject to change without notice.

Panasonic®

Panasonic Company
Division of Matsushita Electric Corporation of America
One Panasonic Way. Secaucus. N.J. 07094

Panasonic Hawaii, Inc.
320 Waiakamilo Road. Honolulu. Hawaii 96817

Panasonic Canada
Division of Matsushita Electric of Canada Ltd.
5770 Ambler Drive. Mississauga
Ontario L4W 2T3

LOCATION OF CONTROLS AND COMPONENTS

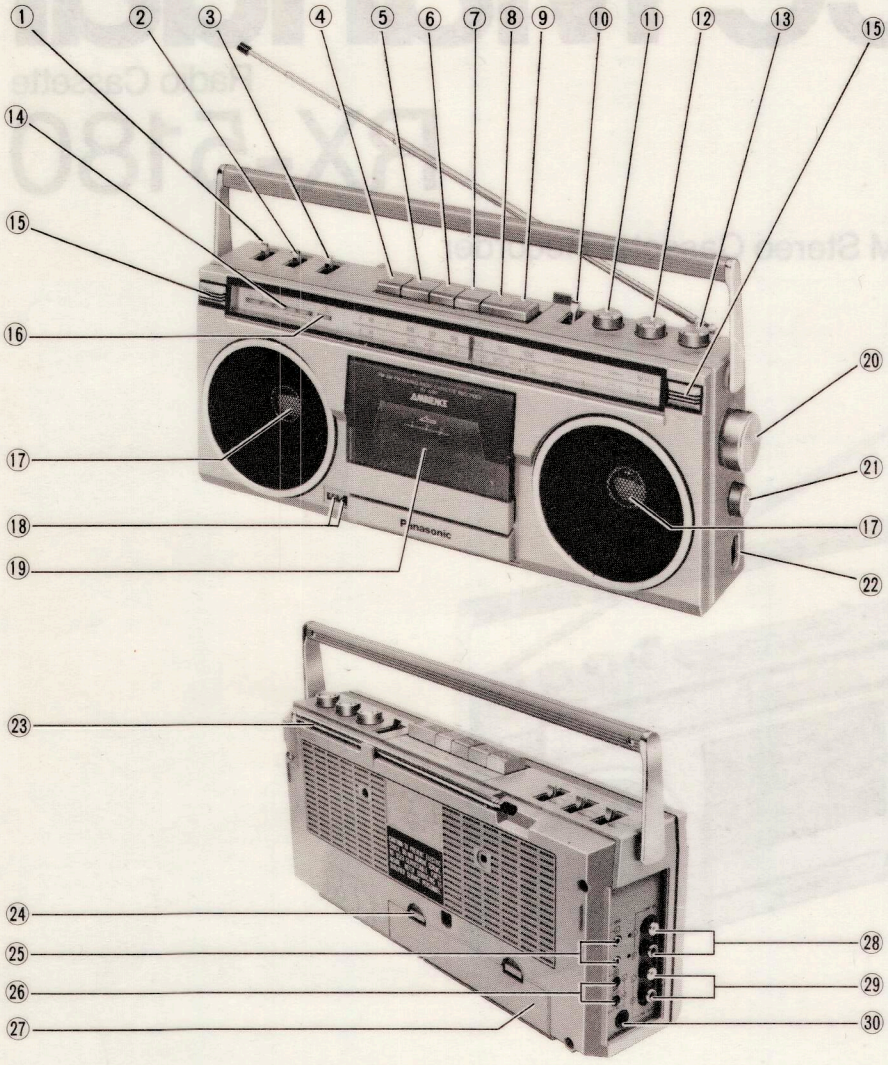

① Meter Selector (OFF/BATT/LEVEL)
② Mode Selector/Beat Proof Switch (MONO, Ⅱ /STEREO, Ⅰ /AMBIENCE, Ⅰ)
③ Function Selector (TAPE/RADIO/LINE)
④ Pause/Eject Button
⑤ Stop Button
⑥ Fast Forward/Cue Button
⑦ Rewind/Review Button
⑧ Playback Button
⑨ Record Button
⑩ Band Selector (AM/FM)
⑪ Tone Control
⑫ Volume Control
⑬ Balance Control
⑭ LED Indicator (LEVEL/BATT)
⑮ Built-in Microphone (L, Rch)
⑯ FM Stereo Indicator
⑰ Speakers (L, Rch) [10 cm (4''), 3Ω]
⑱ Tape Counter and Reset Button
⑲ Cassette Compartment
⑳ Tuning Control
㉑ Mixing Level Control
㉒ AC Socket
㉓ Telescopic Antenna
㉔ DC Input Jack (DC IN 9 V, ⊖-◑-⊕)
㉕ Microphone Jacks (L, Rch) [0.25 mV]
㉖ External Speaker Jacks (L, Rch) [3~8Ω]
㉗ Battery Compartment
㉘ Line Input Jacks (L, Rch) [250 mV/50 kΩ over]
㉙ Line Output Jacks (L, Rch) [0.42 V/10 kΩ under]
㉚ Headphones Jack [8Ω]

Fig. 1

DISASSEMBLY INSTRUCTIONS

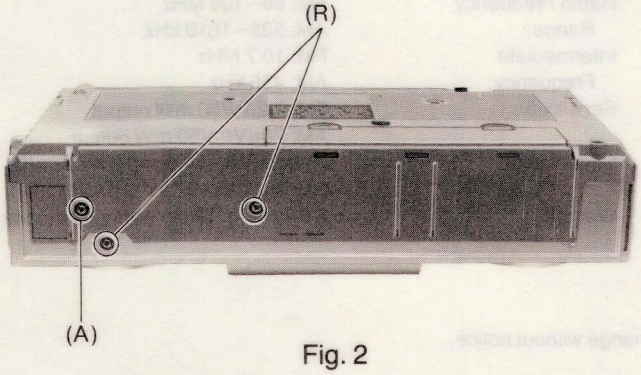

Fig. 2

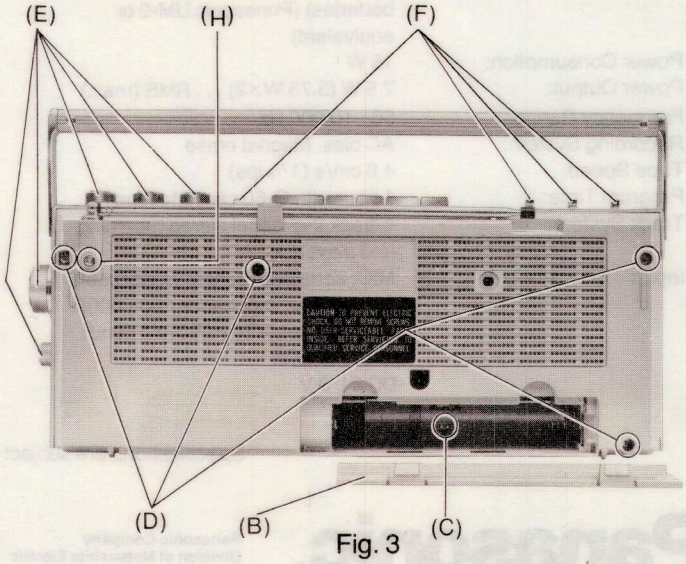

Fig. 3

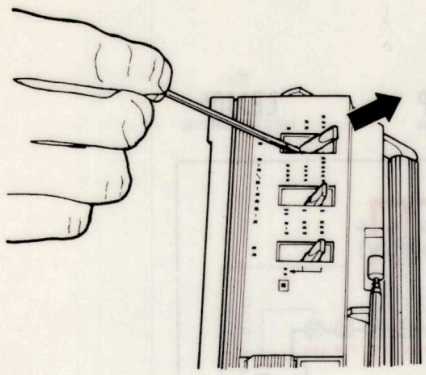

Fig. 4

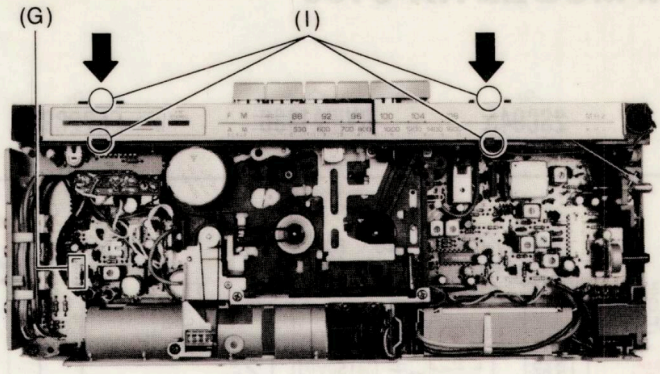

Fig. 5

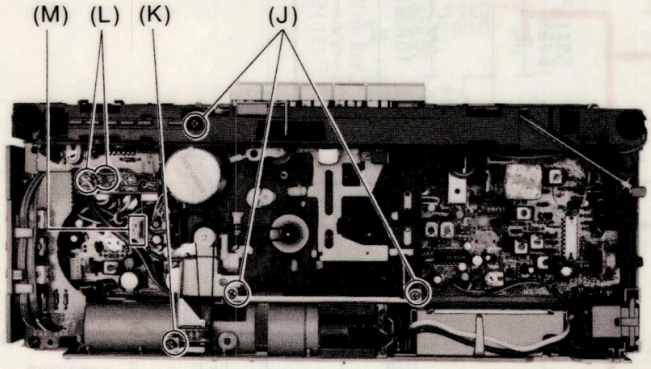

Fig. 6

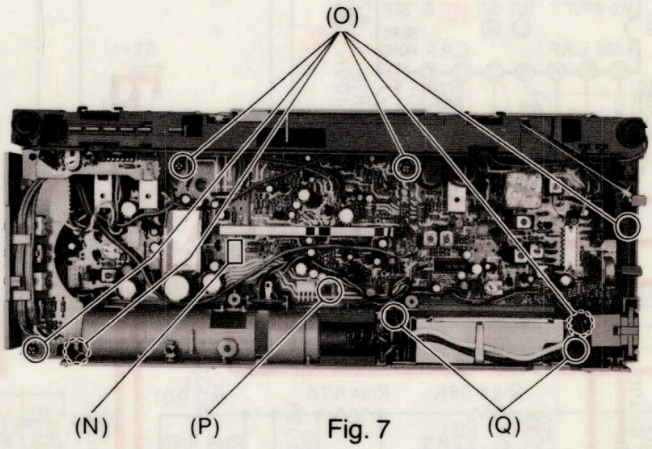

Fig. 7

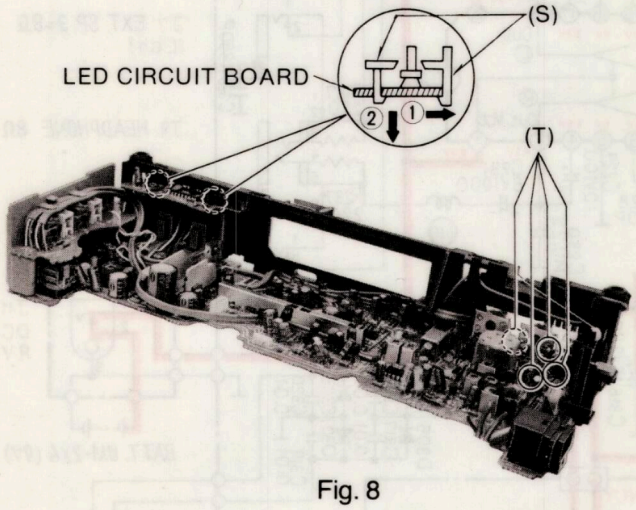

Fig. 8

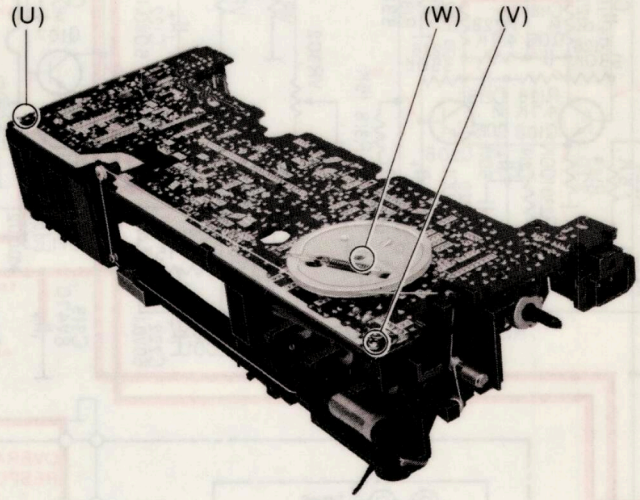

Fig. 9

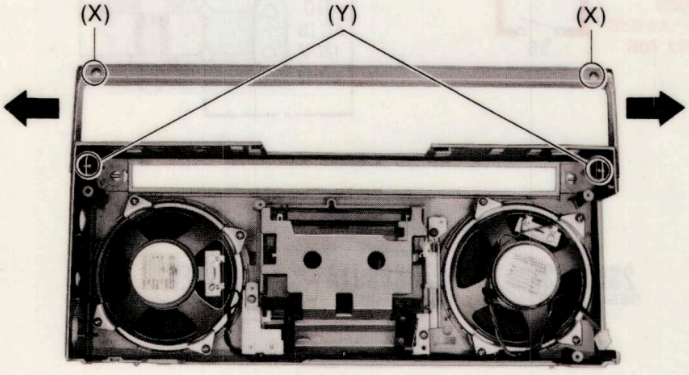

Fig. 10

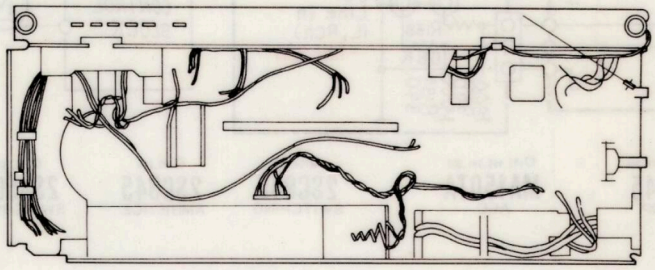

Fig. 11

Procedure	To remove—.	Remove—.	Shown in Fig—.
1	Front Cabinet	Screw (3×8) ..... (A)×1	2
		Battery Cover ..... (B)×1 Screw (3×10) ..... (C)×1 Screw (3×40) ..... (D)×4 Knob ..... (E)×5	3
		Lever Knob ..... (F)×4	3 and 4
		Speaker Connector ..... (G)×1	5
	Telescopic Antenna	Screw (3×12) ..... (H)×1	3
2	Dial Scale	Rib ..... (I)×4	5
3	Mechanism	Screw (3×30) ..... (J)×3 Screw (3×8) ..... (K)×1 Unsolder Motor Wires ..... (L)×2 Switch Connector ..... (M)×1	6
		Head Connector ..... (N)×1	7
4	Main Circuit Board	Screw (3×10) ..... (O)×6 Screw (3×8) ..... (P)×1 Screw (3×10) ..... (Q)×2	7
		Screw (3×8) ..... (R)×2	2
5	LED Circuit Board	Rib *1 ..... (S)×4	8
6	Dial Shassis	Unsolder Antenna Wires ..... (T)×4	8
		Screw (3×10) ..... (U)×1 Screw (3×14) ..... (V)×1 Screw (2.6×8) ..... (W)×1	9
7	Handle	Screw (3×8) ..... (X)×2 Handle Holding Spring ..... (Y)×2	10

*1, Remove the LED Circuit Board in the direction of arrow① and ② as shown in fig. 8.

DIAL THREADING

■ DIAL CORD LENGTH: 100 cm (39 3/8")

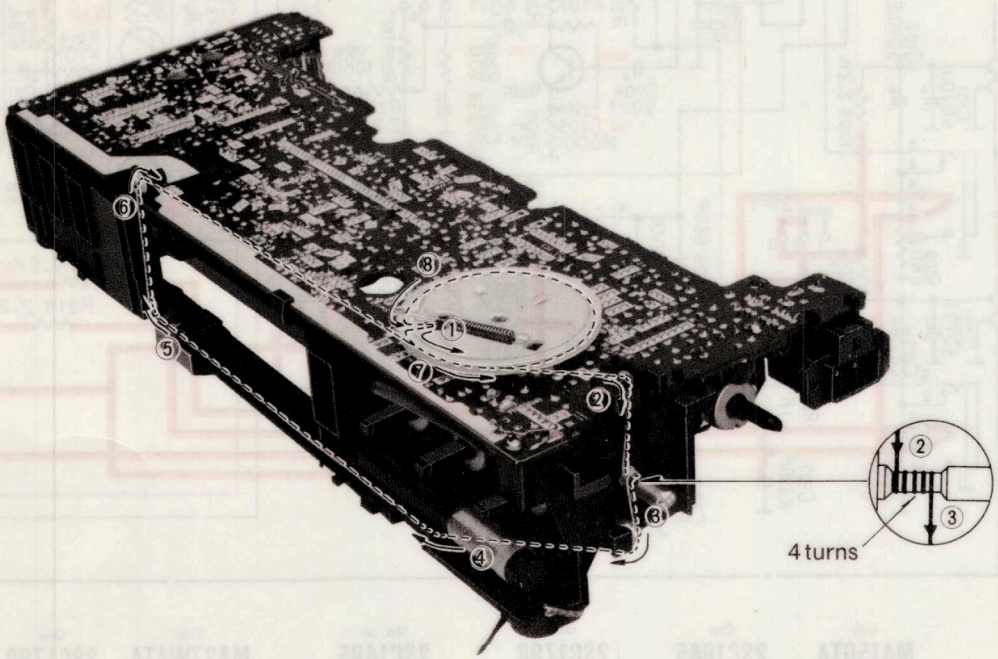

Fig. 12

ALIGNMENT

■ ALIGNMENT INSTRUCTION

READ CAREFULLY BEFORE ATTEMPTING ALIGNMENT

Notes:
1. Set volume control to maximum.
2. Set function switch to radio.
3. Set band selector to AM or FM.
4. Set balance control to center.
5. Set tone control to maximum.
6. Set power source voltage to 9 V DC.
7. Output of signal generator should be no higher than necessary to obtain an output reading.

	SIGNAL GENERATOR or SWEEP GENERATOR		RADIO DIAL SETTING	INDICATOR (ELECTRONICS VOLTMETER or SCOPE)	ADJUSTMENT	REMARKS
	CONNECTIONS	FREQUENCY				
	AM ALIGNMENT					
(1)	Fashion loop of several turns of wire and radiate signal into loop of receiver.	455 kHz 30% Mode. 400 Hz.	Point of non-interference.	Output meter across voice coil.	T2 (1st IFT) T3 (2nd IFT)	Adjust for maximum output.
(2)	〃	550 kHz	550 kHz [8.6mm (11/32")]	〃	L4 (OSC Coil) (*1) L3 (ANT Coil)	Adjust for maximum output. Adjust L3 by moving coil bobbin along ferrite core.
(3)	〃	1500 kHz	1500 kHz [78.3mm (3 3/32")]	〃	CT4 (OSC Trimmer) CT3 (ANT Trimmer)	Adjust for maximum output. Repeat steps (2) and (3).
	(*1) Cement antenna bobbin with wax after completing alignment.					
	FM-IF ALIGNMENT					
(4)	Connect to test point ▼5 through 0.01μF. Negative side to test point ▼1.	10.7 MHz	Point of non-interference. (on/about 90 MHz).	Connect vert. amp. of scope to test point ▼4. Negative side to test point ▼1.	T1 (FM 1st IFT) T4 (FM 2nd IFT)	Adjust for maximum amplitude. (Refer to fig. 13).
(5)	〃	〃	〃	〃	T4 (FM 2nd IFT) (Secondary)	Adjust for maximum amplitude. (Refer to fig. 14).
	FM-RF ALIGNMENT					
(6)	Connect to test point ▼2 through FM dummy antenna. Negative side to test point ▼1. (Refer to fig. 15).	90 MHz	90 MHz [10.7mm (13/32")]	Output meter across voice coil.	L2 (FM OSC Coil) L1 (FM Tuning Coil)	(*2) Adjust for maximum output.
(7)	〃	106 MHz	106 MHz [73.2mm (2 7/8")]	〃	CT2 (FM OSC Trimmer) CT1 (FM Tuning Trimmer)	(*2) Adjust for maximum output. Repeat steps (6) and (7).
	(*2) Three output responses will be present; proper tuning is the center frequency.					

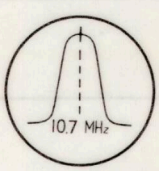

Fig. 13

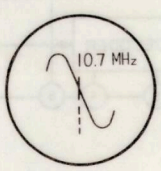

Fig. 14

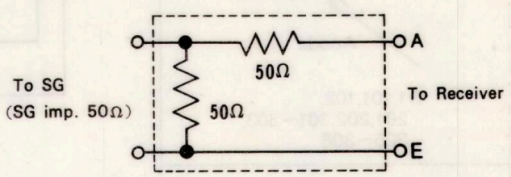

Fig. 15 FM Dummy Antenna

■ SEPARATION ALIGNMENT

ITEM	SIGNAL 90 MHz, 60 dB SOURCE CONNECTION	EQUIPMENT CONNECTION (ELECTRONIC COUNTER)	ADJUSTMENT	SPECIFICATION	REMARKS
Adjustment of pilot signal.	———	▼3 . . . (+) side ▼1 . . . (−) side	VR1	19 kHz	Adjust VR1 for 19 kHz (±200 Hz) reading on electronics counter.

■ LED METER ALIGNMENT

ITEM	ADJUSTMENT	REMARKS
Battery check	VR306	1. Set function switch to tape position. 2. Set meter switch to battery position. 3. Supply DC 6.3 V through the battery terminal. 4. Adjust VR306 so that the 4th LED from left begins to fade away.

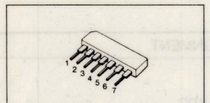
IC1

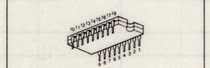
IC2

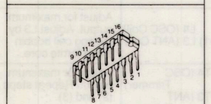
IC3,5

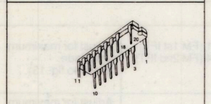
IC4

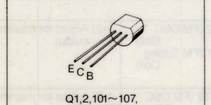

Q1,2,101~107, 201~207, 301,303~306

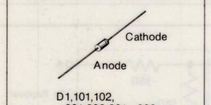

D1,101,102, 201,202,301~303, 305~308

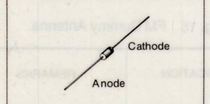

D2

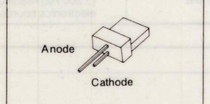

D3,310~314

Notes:

1. S1-1 ..... Band switch in "AM" position. (1 ... AM, 2 ... FM)
2. S2-1~S2-12 ..... Record/playback switch in "playback" position.
3. S3-1~S3-4 ..... Function switch in "tape" position. (1 ... TAPE, 2 ... RADIO, 3 ... LINE)
4. S4-1~S4-4 ..... Mode/beat proof switch in "AMBIENCE/Ⅰ" position. (1 ... MONO/Ⅱ, 2 ... STEREO/Ⅰ, 3 ... AMBIENCE/Ⅰ)
5. S5-1~S5-2 ..... Meter switch in "OFF" position. (1 ... OFF, 2 ... BATTERY, 3 ... LEVEL)
6. S6 ..... Motor ON/OFF switch in "OFF" position.
7. S7 ..... AC/DC select switch in "DC" position.
8. VR1 ..... VCO oscillator frequency adjustment VR.
9. VR101, 201 ..... Volume control.
10. VR102, 202 ..... Tone control.
11. VR301 ..... Mixing level control.
12. VR302 ..... Balance control.
13. VR304 ..... Playback level adjustment VR.
14. VR305 ..... Bias current adjustment VR.
15. VR306 ..... Battery check adjustment VR.
16. The mark (▼) shows test point. e.g. ▼ =Test point 1.
17. DC voltage measurements are taken with electronics voltmeter from negative terminal of battery.
    ( ) ... FM position, 〈 〉 ... AM position, [ ] .. Record position.
18. Battery current: No signal ..... 90 mA
    Maximum (Radio) ... 800 mA
    Maximum (Tape) .... 730 mA

IMPORTANT SAFETY NOTICE

THE SHADED AREA ON THIS SCHEMATIC DIAGRAM INCORPORATES SPECIAL FEATURES IMPORTANT FOR SAFETY.
WHEN SERVICING IT IS ESSENTIAL THAT ONLY MANUFACTURER'S SPECIFIED PARTS BE USED FOR THE CRITICAL COMPONENTS IN THE SHADED AREAS OF THE SCHEMATIC.

IC3

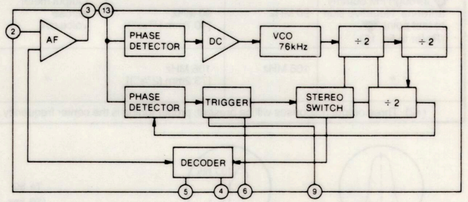

IC5

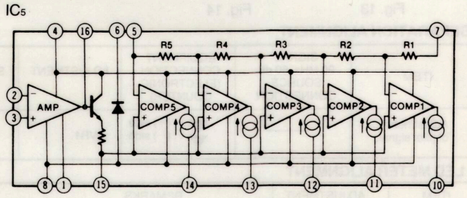

SCHEMATIC DIAGRAM MODEL RX-5180

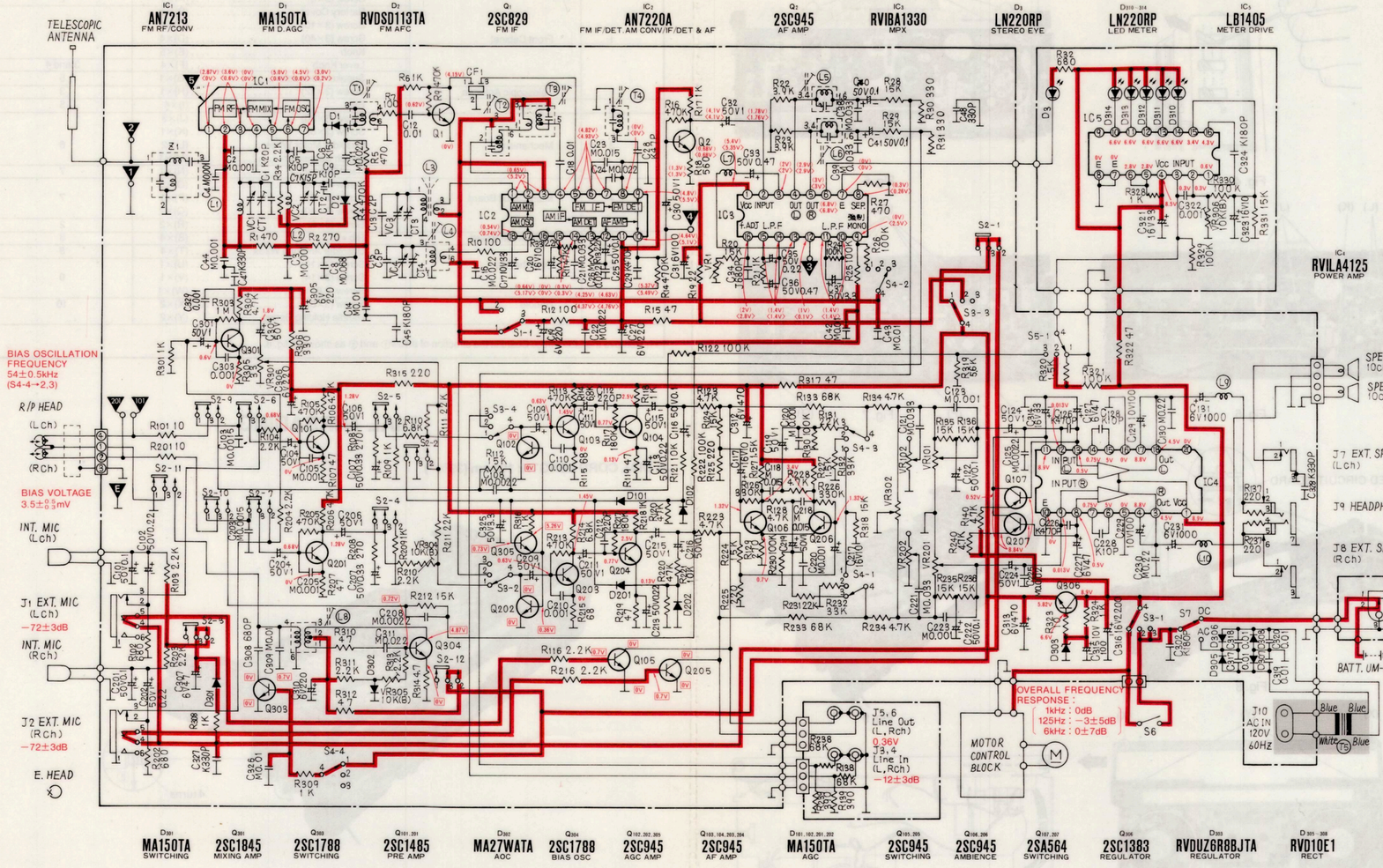

CIRCUIT BOARD WIRING VIEW MODEL RX-5180

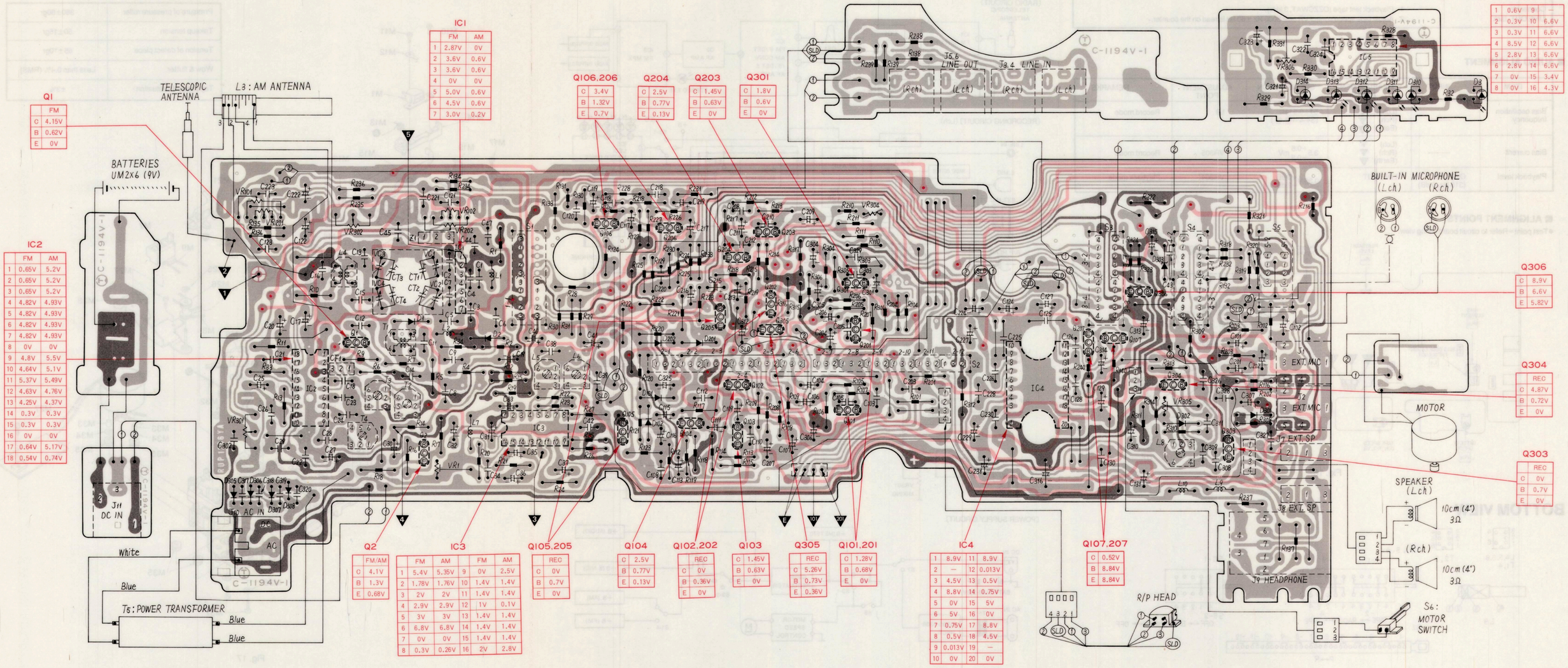

■ TAPE SPEED ALIGNMENT

COUNTER	ADJUSTMENT
Connect to LINE OUT Jack	1. Playback test tape (QZZCWAT, 3 kHz). 2. Adjust tape speed control VR until 3000 Hz ±60 Hz is read on the counter.

■ AUDIO ALIGNMENT

ITEM	INPUT	MEASUREMENT POINT	SPECIFICATION	ADJUSTMENT POINT	REMARKS
Bias oscillation frequency	——	(Lch) 101 (Rch) 201 (Earth) E	54±0.5 kHz (S4-4→②,③)	L8	Record mode
Bias current	——	(Lch) 101 (Rch) 201 (Earth) E	$3.5^{+0.5}_{-0.3}$ mV	VR305	Record mode
Playback level	QZZCFM (315 Hz, 0 dB)	LINE OUT	0.36 V $^{+3\ dB}_{-2\ dB}$	VR304	Playback mode

■ ALIGNMENT POINTS

●Test point = Refer to circuit board wiring view.

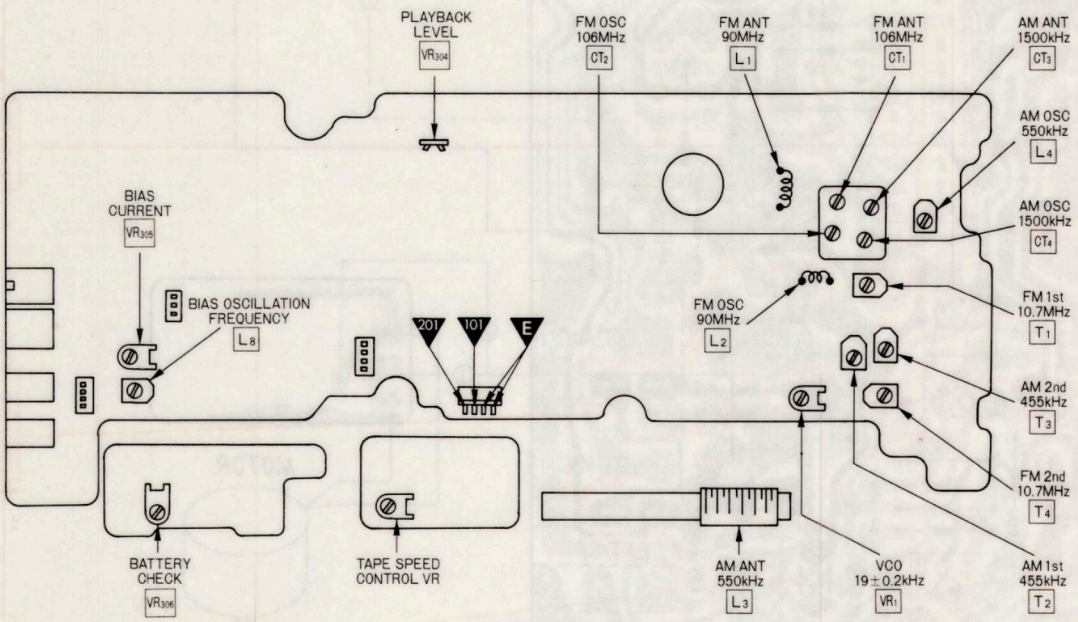

Fig. 16

BOTTOM VIEW

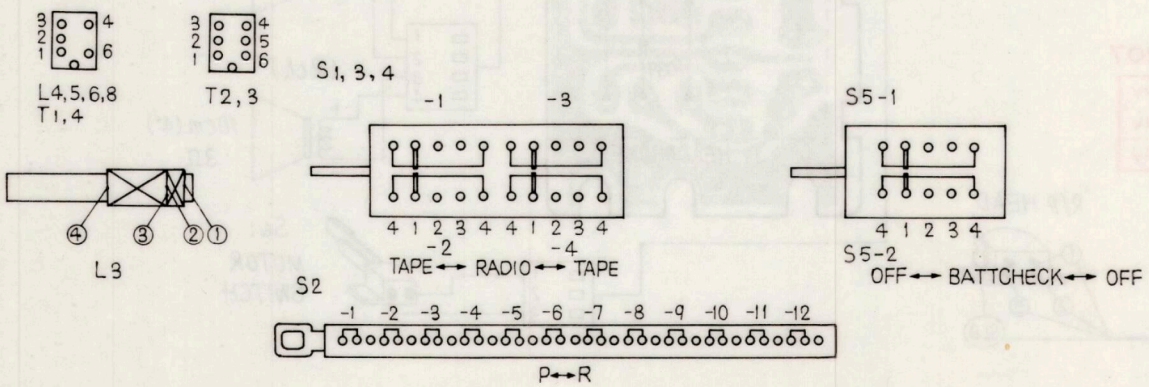

BLOCK DIAGRAM OF ELECTRICAL CIRCUITS

〔RADIO CIRCUIT〕

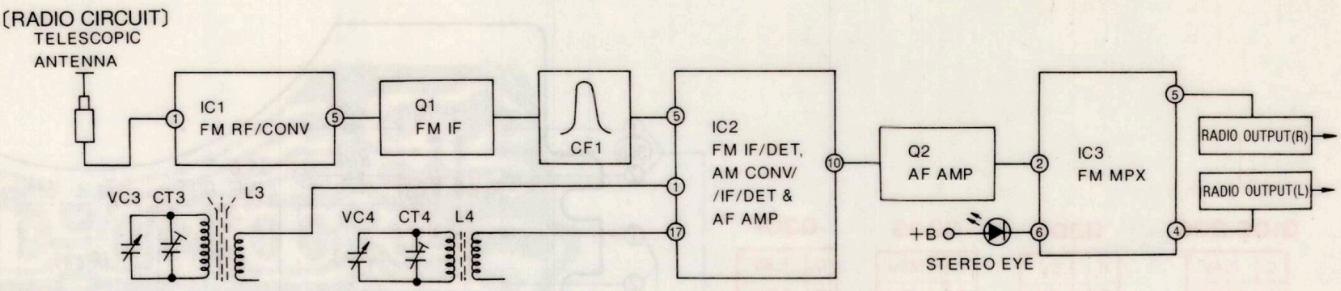

〔RECORDING CIRCUIT〕(Lch)

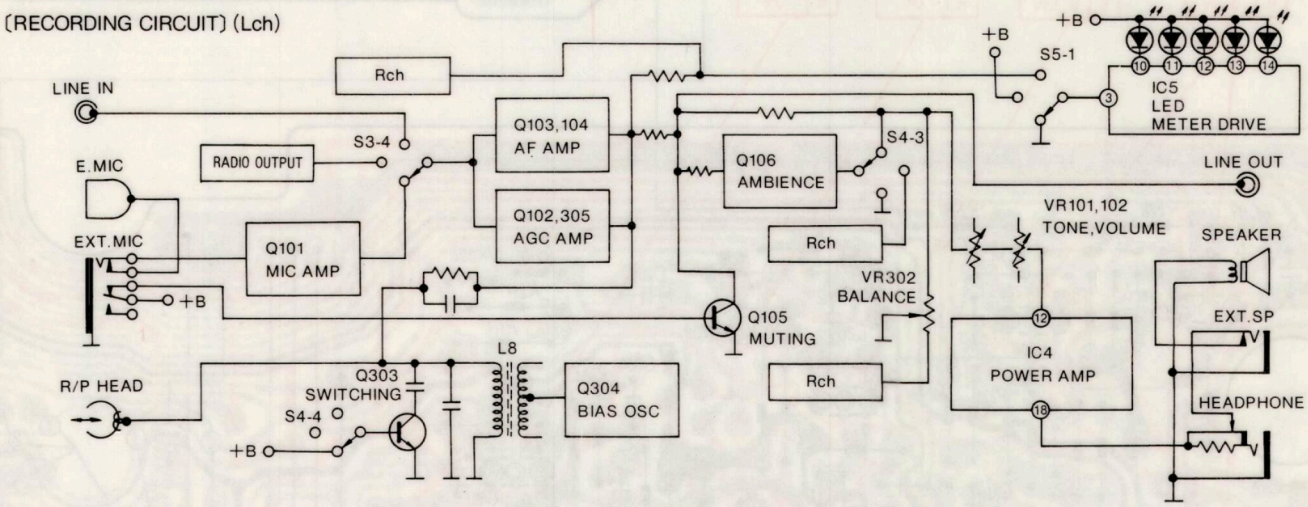

〔PLAYBACK CIRCUIT〕(Lch)

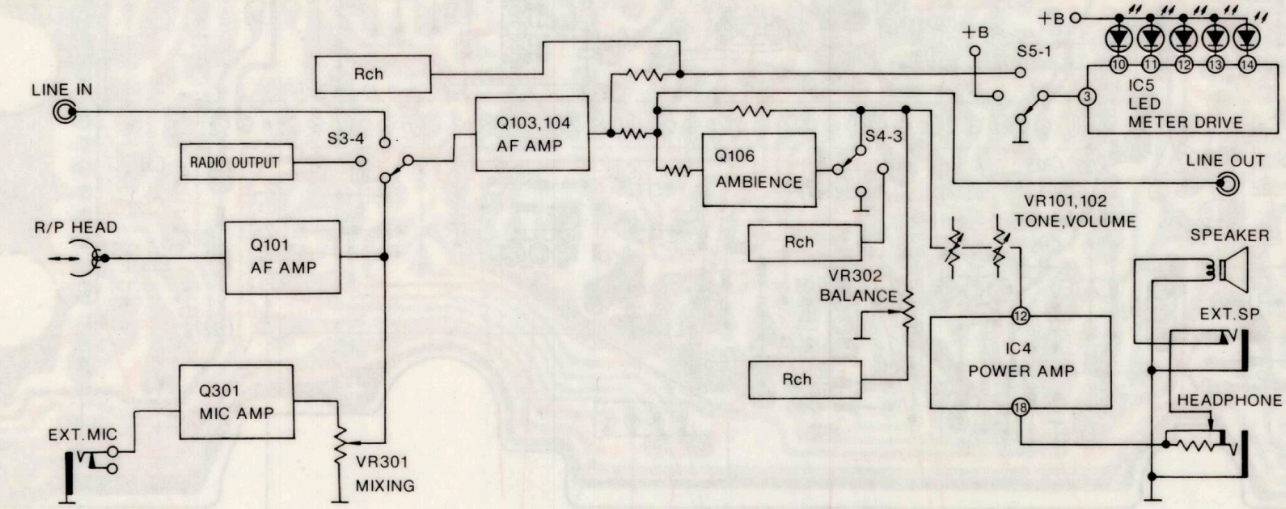

〔POWER SUPPLY CIRCUIT〕

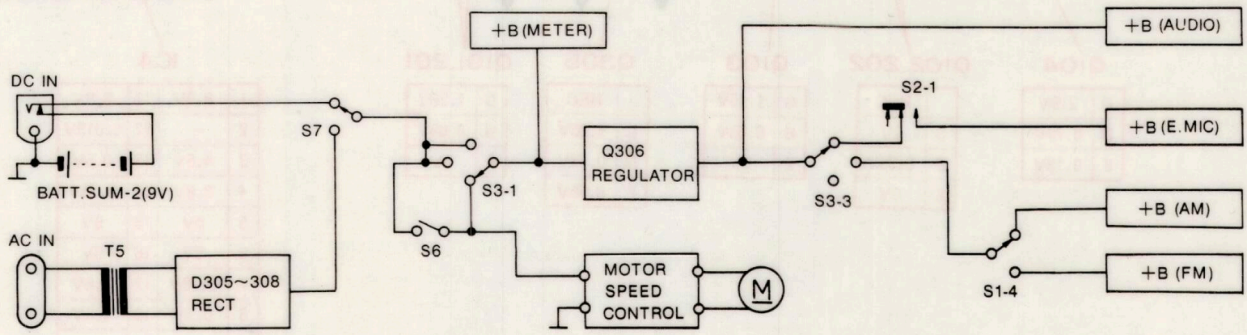

EXPLODED VIEWS

Specification

Pressure of pressure roller	360±60gr
Takeup tension	50±15gr
Tension of detect plece	65±10gr
Wow & flutter	Less than 0.4% (RMS)
Tape speed fluctuation	±3%

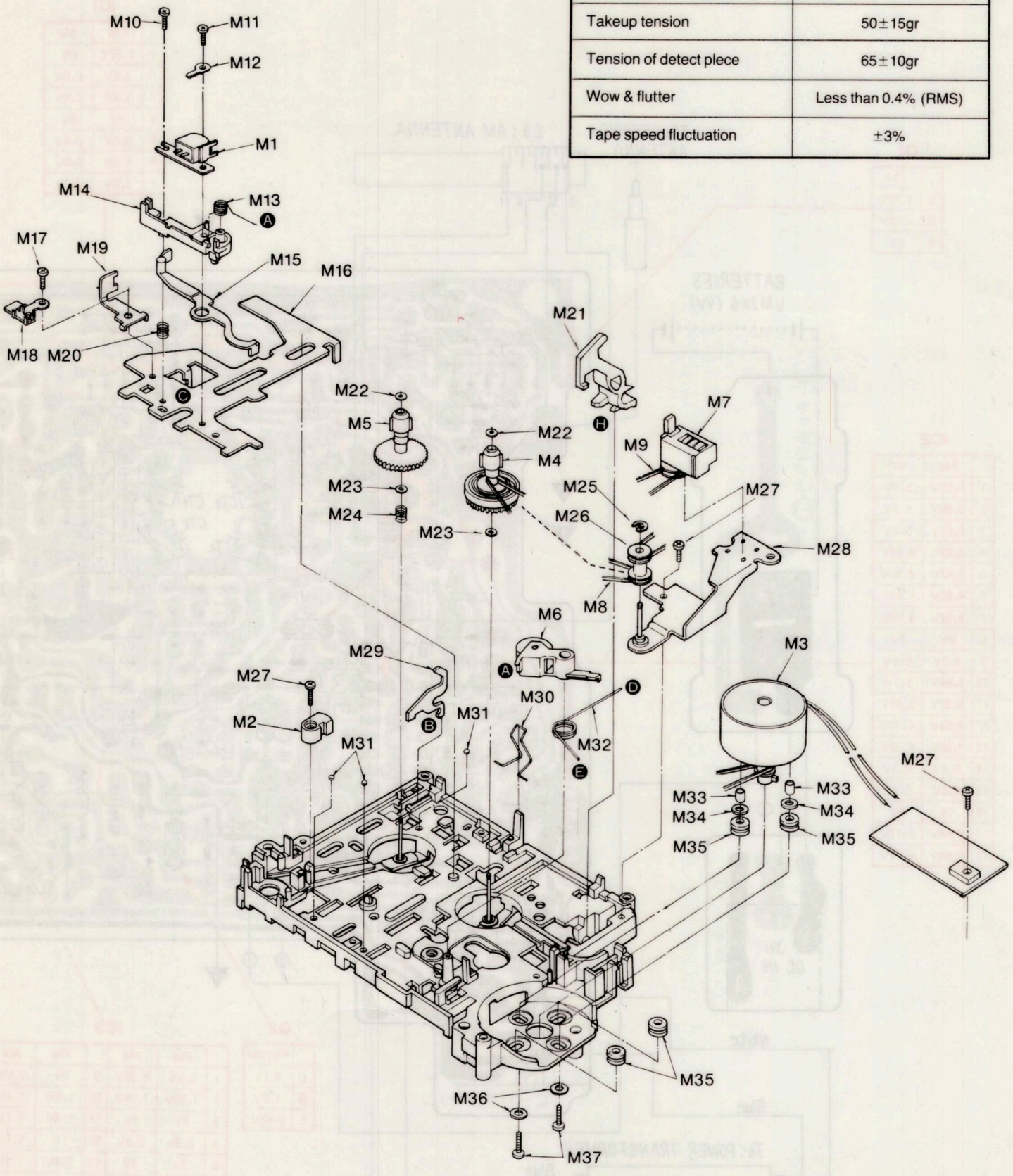

Fig. 17

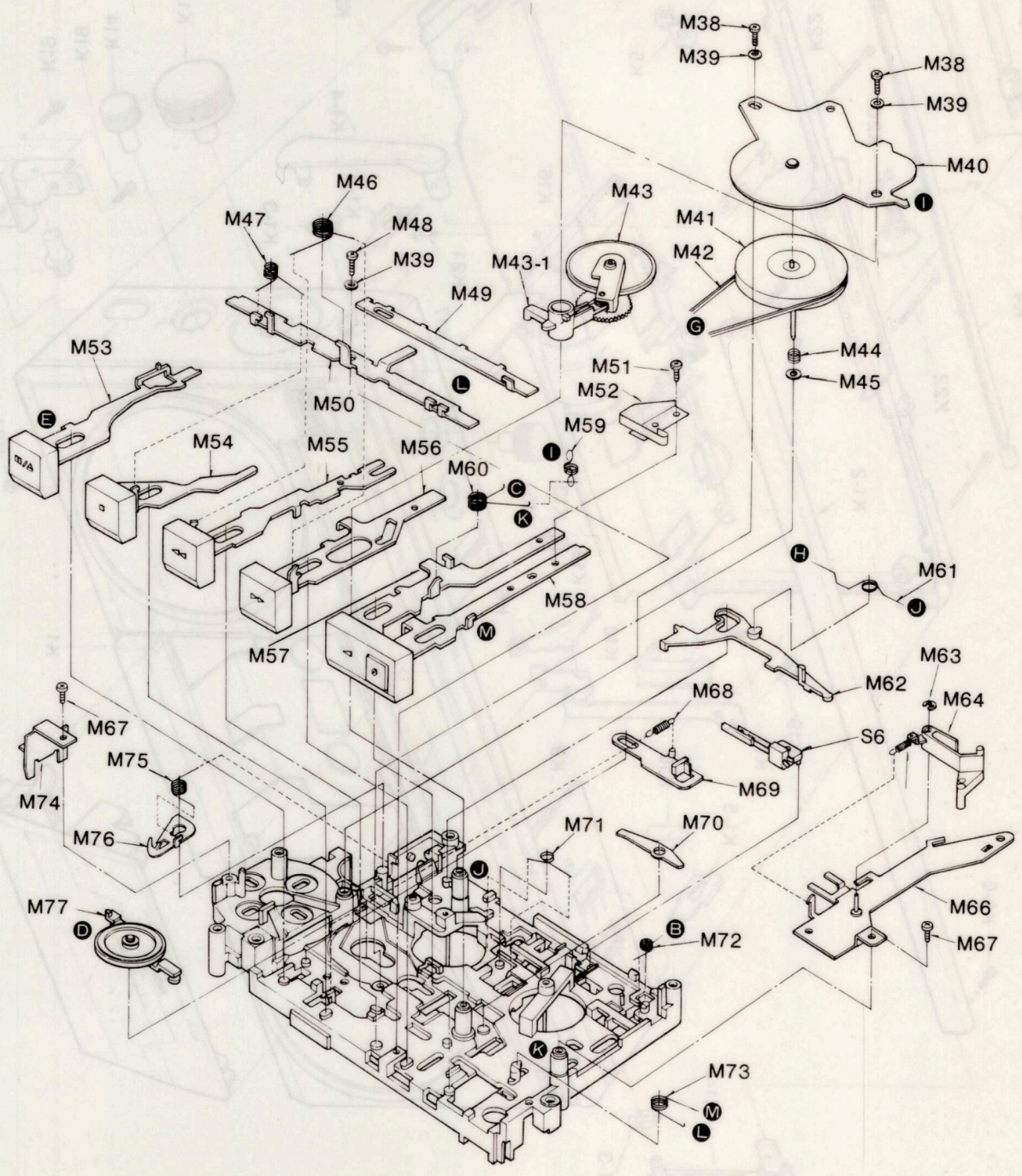
M38
M39
M38
M39
M40
I
M46
M43
M47
M48
M41
M39
M43-1
M42
M49
G
M53
M44
M51
M45
L
M52
M50
E
M59
M54
M55
M56
I
M60
C
K
H
M61
M58
J
M57
M
M63
M62
M68
M64
M67
S6
M75
M69
M74
M71
M70
M76
J
M66
M77
D
B
M72
M67
K
M73
M
L

Fig. 18

CABINET PARTS

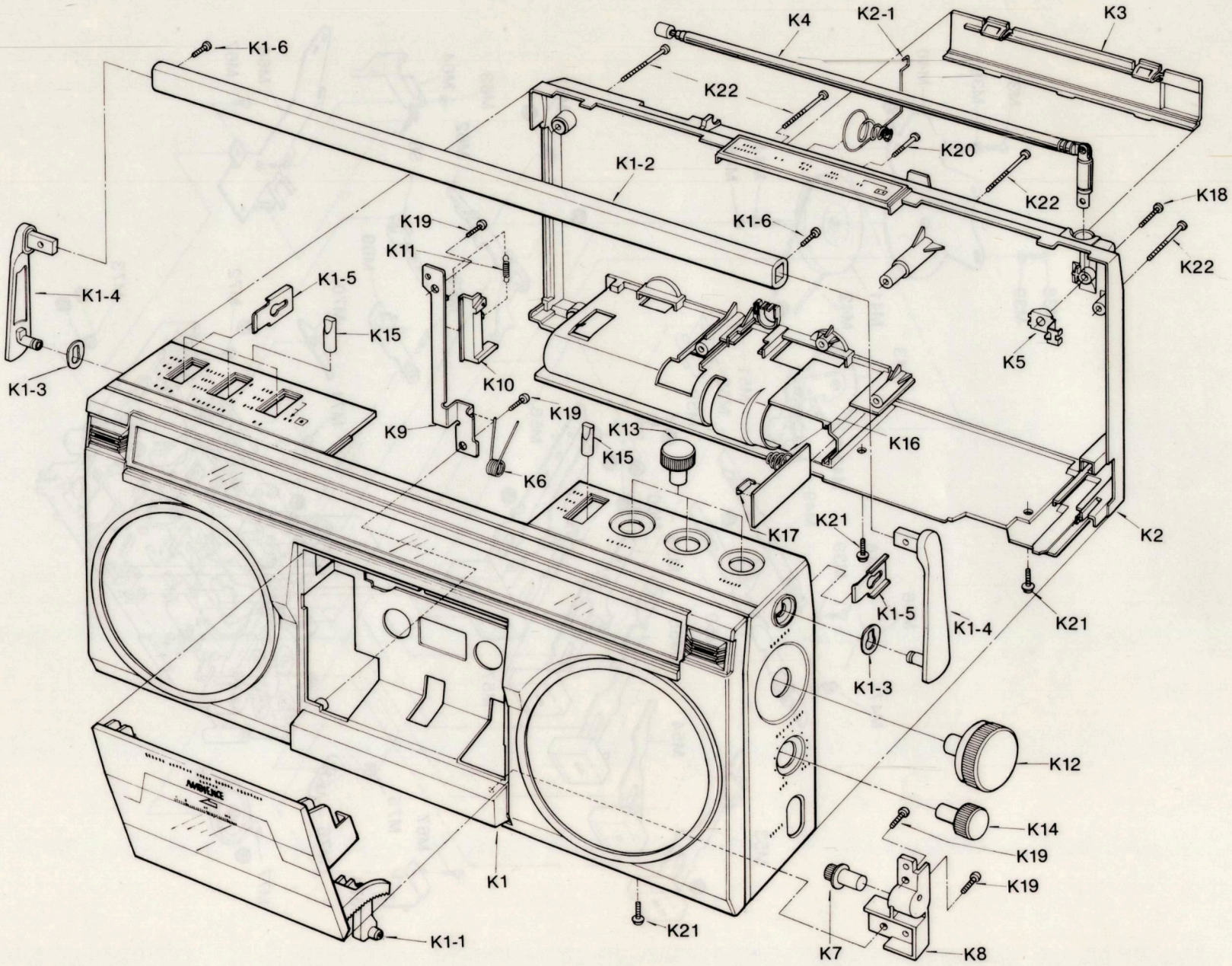

Fig. 19

ELECTRICAL PARTS LOCATION

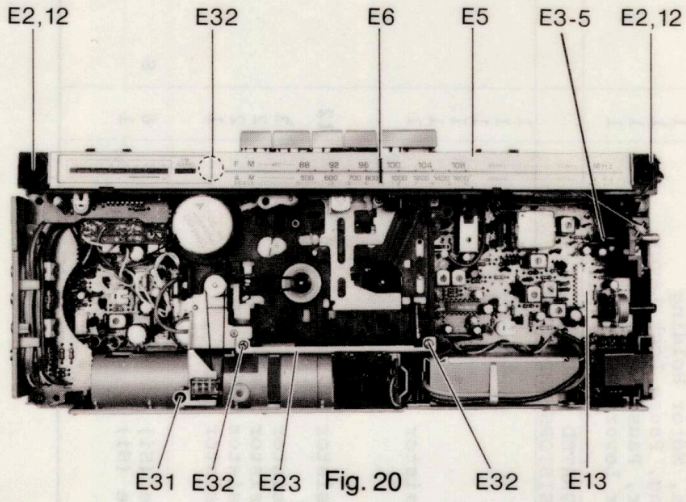

Fig. 20

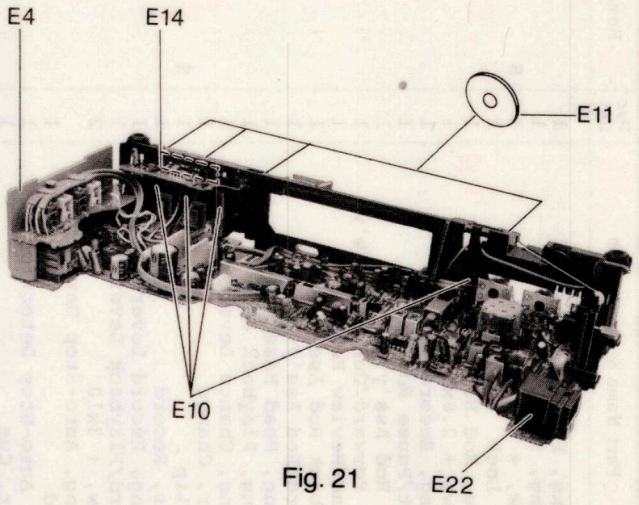

Fig. 21

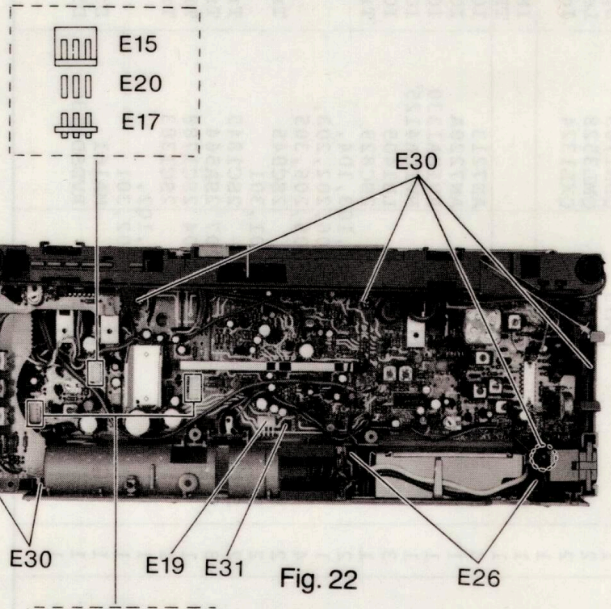

Fig. 22

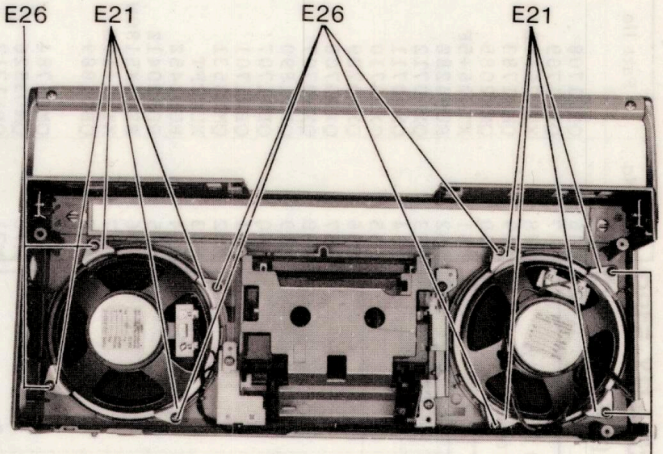

Fig. 23

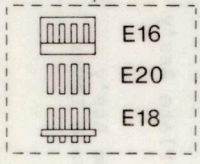

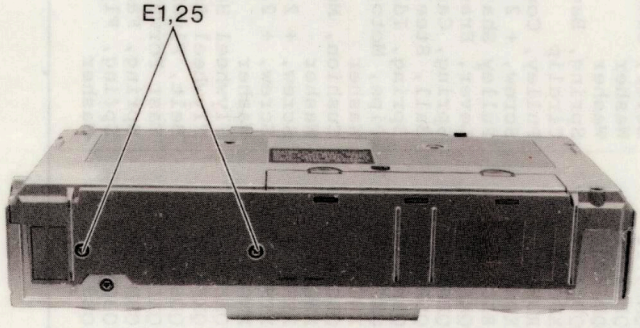

Fig. 24

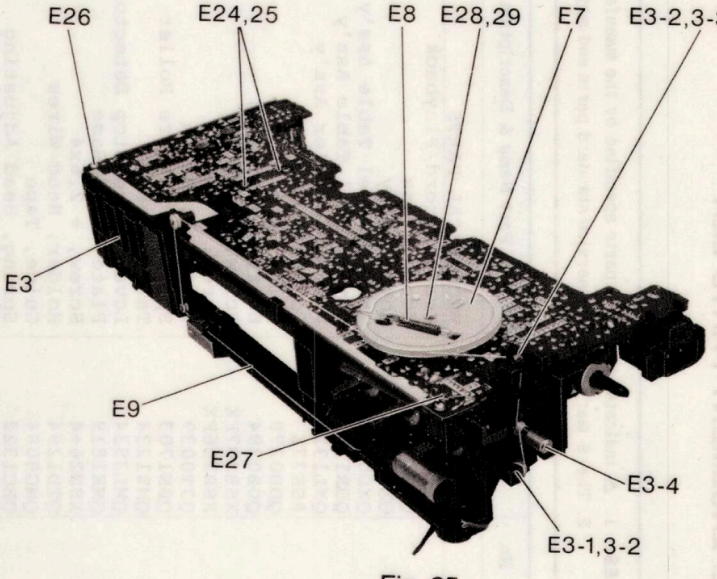

Fig. 25

■REPLACEMENT PARTS LIST ·····Model RX-5180

(RD8012-1823C)

NOTES: 1. ⚠ indicates that only parts specified by the manufacturer be used for safety.
2. The S mark indicates service standard parts and may differ from production parts.

Ref. No.	Part No.	Part Name & Description	Per Set	Remarks
		MECHANICAL PARTS		
M1	QWY4128Z	Head, Record/Playback	1	
M2	QWY2144	Head, Erase	1	
M3	QXU0207	Motor Ass'y	1	
M4	QXD0113	Take Up Reel Table Ass'y	1	
M5	QDR1141	Supply Reel Table Ass'y	1	
M6	QXL1325	Pressure Roller Ass'y	1	
M7	RSE77Z	Counter	1	
M8	QDB0270	Belt, Counter (1)	1	
M9	QDB0294	Belt, Counter (2)	1	
M10	XSB2D7FX	Screw, + 2x7	1	
M11	XSB2D6FX	Screw, + 2x6	1	
M12	QJT0039	Terminal, Earth	1	
M13	QBN1703	Spring, Pressure Roller	1	
M14	QMZ1234	Table, Head	1	
M15	QML3534	Lever, Auto-Stop Detector	1	
M16	QMK1819	Plate, Head Base	1	
M17	XSN26+4	Screw, + 2.6x4	1	S
M18	QTD1294	Holder, Head Wires	1	
M19	QMG0084	Guide, Tape	1	
M20	QBC1322	Spring, Head Adjusting	1	
M21	QML3712	Lever, Cassette-Up	1	
M22	QBW2008	Washer	2	
M23	QBJ3224	Washer	2	
M24	QBC1272	Spring, Back Tension	1	
M25	XUC2FT	Circlip	1	S
M26	RDR41Z	Pulley, Counter	1	
M27	XTN26+8B	Screw, + 2.6x8	3	S
M28	RZU2X5180N	Pulley Shaft Ass'y	1	
M29	QML3527	Lever, Erase Safety	1	
M30	QBN1711	Spring, Cassette Retainer	1	
M31	QDK1012	Ball, Steel	3	
M32	QBN1702	Spring, Idler	1	
M33	QMC0108	Pipe, Motor	2	
M34	XWG2X7.5B	Washer	1	
M35	QBG1420	Cushion, Motor	4	
M36	XWG26	Washer	2	S
M37	XSN26+8	Screw, + 2.6x8	2	S
M38	XTN26+10B	Screw, + 2.6x10	2	S
M39	XWG26	Washer	3	S
M40	QXH0318	Flywheel Holding Plate Ass'y	1	
M41	QXF0156	Flywheel Ass'y	1	
M42	QDB0269	Belt, Flywheel	1	
M43	QXL1328	Fast Forward Frame Ass'y	1	
M43-1	QBN1710	Spring, Fast Forward Lever	1	
M44	QBC1359	Spring, Flywheel	1	
M45	QBJ3224	Washer	1	
M46	QBN1708	Spring, Fast Forward Rod	1	
M47	QBN1709	Spring, Stop Rod	1	
M48	XTN26+8B	Screw, + 2.6x8	1	S
M49	QMR1783	Rod, Lock	1	
M50	QMF2085	Plate, Rod Holding	1	
M51	XTN26+5F	Screw, + 2.6x5	1	
M52	RUS428Z	Spring, Record Lever	1	
M53	QXR0712	Eject/Pause Rod Ass'y	1	
M54	QXR0711	Stop Rod Ass'y	1	
M55	QXR0710	Fast Forward/Cue Rod Ass'y	1	
M56	QXR0709	Rewind/Review Rod Ass'y	1	
M57	QXR0708	Playback Rod Ass'y	1	
M58	QXR0707	Record Rod Ass'y	1	
M59	QBT1890	Spring, Head Base Plate	1	
M60	QBN1707	Spring, Playback Rod	1	
M61	QBN1701	Spring, Change Lever	1	
M62	QML3531	Lever, Change	1	
M63	XUC2FT	Circlip	1	S
M64	RUB245Z	Lever, Record	1	
M65	RDS2041Z	Spring, Record Lever	1	
M66	RZU1X5180N	Record/Playback Lever Ass'y	1	
M67	XTV3+10G	Screw, + 3x10	2	
M68	QBT1889	Spring, Auto-Stop Detection Rod	1	
M69	QMR1784	Rod, Auto-Stop Detection	1	
M70	QML3526	Lever, Cue	1	
M71	QBN1712	Spring, Fast Forward	1	
M72	QBN1704	Spring, Erase Safety Lever	1	
M73	QBN1706	Spring, Record Rod	1	
M74	RUL637Z	Angle, Motor Holding	1	
M75	QBN1705	Spring, Pause Lock Lever	1	
M76	QML3528	Lever, Pause Lock	1	
M77	QXL1324	Idler Lever Ass'y	1	
		INTEGRATED CIRCUITS, TRANSISTORS AND DIODES		
IC1	AN7213	IC	1	
IC2	AN7220A	IC	1	
IC3	RVIBA1330	IC	1	
IC4	RVILA4125	IC	1	
IC5	LB1405	IC	1	
Q1	2SC829	Transistor (Si)	1	
Q2,102,103,104, 105,106,202,203, 204,205,206,305	2SC945	Transistor (Si)	12	
Q101,201,301	2SC1845	Transistor (Si)	3	
Q107,207	2SA564	Transistor (Ge)	2	
Q303,304	2SC1788	Transistor (Si)	2	
Q306	2SC1383	Transistor (Si)	1	
D1,101,102, 201,202,301	MA161	Diode (Si)	6	S
D2	RVDSD113	Diode (Si)	1	

Ref. No.	Part No.	Part Name & Description	Per Set	Remarks
D3,310,311, 312,313,314				
	LN220RP	LED, STEREO EYE/METER	6	
D302	MA27WA	Diode (Si)	1	
D303	RVDUZ6R8BJ	Zener	1	
D305,306,307,308				
	SM112	Diode (Si)	4	S ⚠
		COILS AND TRANSFORMERS		
L1	RLD4Y44	Antenna Coil, FM	1	
L2	RLD4Y43	Oscillator Coil, FM	1	
L3	RLF2V64	Antenna Coil, AM	1	
L4	RLO2M18	Oscillator Coil, AM	1	
L5,6	QLM1M2	Trap Coil, 19KHz	2	
L8	QLB0178	Oscillator Coil, Bias	1	
T1,4	RLI4M101	IFT, FM 1st, 2nd	2	S
T2	RLI2M220	IFT, AM 1st	1	S
T3	RLI2M221	IFT, AM 2nd	1	S
T5	RLT5Z320A	Power Transformer	1	⚠
		VARIABLE RESISTORS		
VR1,305,306				
	EVNM4AA00B14	Preset, 10kΩ (B)	3	S
VR101,201	RVV54A133	Variable Resistor, 50kΩ (A)	1	
VR102,202	RVV54A134	Variable Resistor, 50kΩ (A)	1	
VR301	RVV54A132	Variable Resistor, 50kΩ (A)	1	
VR302	RVV54W131	Variable Resistor, 50kΩ (D)	1	
VR304	EVNJ0AA00B14	Preset, 10kΩ (B)	1	S
		VARIABLE CAPACITORS		
VC1,2,3,4,CT1,2,3,4				
	RCV4LC2V1K	Tuning Capacitor	1	
		CERAMIC FILTER		
CF1	RVF107MFZW	Ceramic Filter	1	
		COMPONENT COMBINATION		
Z1	RXABPWB5	Component Combination (L,C)	1	
		SPEAKER		
	EAS10P81GH	Speaker, 10cm (3-15/16"), 3Ω	2	
		SWITCHES		
S1	RST2D17Z	Switch, Band	1	
S2	RSH2L03Y	" Record/Playback	1	
S3	RST3D11Y	" Function	1	
S4	RST3D11Z	" Mode	1	
S5	RST3B16Z	" Meter	1	
S6	QSB0170	" Motor	1	
S7	Refer to J10	" AC/DC Select	(1)	
		JACKS		
J1,2	RJJ1D2Z	Jack, EXT. MIC	2	
J3,5	RJJ1K1Z	" LINE IN/OUT, Lch (White)	2	
J4,6	RJJ1K1Y	" LINE IN/OUT, Rch (Red)	2	
J7,8	RJJ19Y	" EXT. SP	2	

Ref. No.	Part No.	Part Name & Description	Per Set	Remarks
J9	RJJ1E2Z	Jack, Headphone	1	
J10	RJJ112Y	" AC IN	1	⚠
J11	RJJ97Y	" DC IN	1	
		RESISTORS (Value is in OHMS)		
R1	ERD25FJ471	470 1/4W Carbon	1	S
R2	ERD25FJ271	270 " "	1	S
R4	ERD25TJ474	470 k " "	1	S
R5	ERD25FJ471	470 " "	1	S
R6	ERD25FJ102	1 k " "	1	S
R7	ERD25FJ101	100 " "	1	S
R9	ERD25TJ474	470 k " "	1	S
R10	ERD25FJ101	100 " "	1	S
R11	ERD25FJ473	47 k " "	1	S
R12	ERD25FJ101	100 " "	1	S
R13	ERD25FJ222	2.2 k " "	1	S
R14	ERD25TJ474	470 k " "	1	S
R15	ERD25FJ470	47 " "	1	S
R16	ERD25TJ474	470 k " "	1	S
R17	ERD25FJ102	1 k " "	1	S
R18	ERD25FJ561	560 " "	1	S
R19	ERD25FJ220	22 " "	1	S
R20	ERD25FJ153	15 k " "	1	S
R21	ERD25FJ102	1 k " "	1	S
R22	ERD25FJ392	3.9 k " "	1	S
R23	ERD25FJ392	3.9 k " "	1	S
R24	ERD25TJ104	100 k " "	1	S
R25	ERD25TJ104	100 k " "	1	S
R26	ERD25TJ104	100 k " "	1	S
R27	ERD25FJ471	470 " "	1	S
R28	ERD25FJ153	15 k " "	1	S
R29	ERD25FJ153	15 k " "	1	S
R30	ERD25FJ331	330 " "	1	S
R31	ERD25FJ331	330 " "	1	S
R32	ERD25FJ681	680 " "	1	S
R33	ERD25FJ222	2.2 k " "	1	S
R34	ERD25FJ222	2.2 k " "	1	S
R101,201	ERD25FJ100	10 " "	2	S
R102,202	ERD25FJ681	680 " "	2	S
R103,203	ERD25FJ222	2.2 k " "	2	S
R104,204	ERD25FJ222	2.2 k " "	2	S
R105,205	ERD25TJ474	470 k " "	2	S
R106,206	ERD25FJ472	4.7 k " "	2	S
R107,207	ERD25FJ470	47 " "	2	S
R108,208	ERD25FJ271	270 " "	2	S
R109,209	ERD25FJ102	1 k " "	2	S
R110	ERD25FJ682	6.8 k " "	1	S
R111,211	ERD25FJ223	22 k " "	2	S
R112,212	ERD25FJ153	15 k " "	2	S
R113,213	ERD25TJ474	470 k " "	2	S
R114,214	ERD25FJ682	6.8 k " "	2	S
R115,215	ERD25FJ680	68 " "	2	S
R116,216	ERD25FJ222	2.2 k " "	2	S
R117,217	ERD25TJ184	180 k " "	2	S
R118,218	ERD25FJ102	1 k " "	2	S
R119,219	ERD25FJ470	47 " "	2	S

16

Ref. No.	Part No.	Part Name & Description	Per Set	Remarks
R120,220	ERD25FJ473	47 k 1/4W Carbon	2	S
R121,221	ERD25FJ103	10 k " "	2	S
R122,222	ERD25TJ104	100 k " "	2	S
R123,223	ERD25FJ472	4.7 k " "	2	S
R124,224	ERD25FJ153	15 k " "	2	S
R125,225	ERD25FJ221	220 " "	2	S
R126,226	ERD25TJ334	330 k " "	2	S
R127,227	ERD25FJ152	1.5 k " "	2	S
R128,228	ERD25FJ472	4.7 k " "	2	S
R129	ERD25FJ271	270 " "	1	S
R130,230	ERD25TJ104	100 k " "	2	S
R131,231	ERD25FJ223	22 k " "	2	S
R132,232	ERD25FJ333	33 k " "	2	S
R133,233	ERD25TJ683	68 k " "	2	S
R134,234	ERD25FJ472	4.7 k " "	2	S
R135,235	ERD25FJ153	15 k " "	2	S
R136,236	ERD25FJ153	15 k " "	2	S
R137,237	ERD25FJ221	220 " "	2	S
R138,238	ERD25TJ683	68 k " "	2	S
R139,239	ERD25FJ391	390 " "	2	S
R140,240	ERD25FJ472	4.7 k " "	2	S
R210	ERD25FJ222	2.2 k " "	1	S
R301	ERD25FJ102	1 k " "	1	S
R303	ERD25TJ105	1 M " "	1	S
R304	ERD25FJ472	4.7 k " "	1	S
R305	ERD25FJ330	33 " "	1	S
R306	ERD25FJ331	330 " "	1	S
R308	ERD25FJ102	1 k " "	1	S
R309	ERD25FJ102	1 k " "	1	S
R310	ERD25FJ470	47 " "	1	S
R311	ERD25FJ222	2.2 k " "	1	S
R312	ERD25FJ470	47 " "	1	S
R313	ERD25FJ222	2.2 k " "	1	S
R314	ERD25FJ4R7	4.7 " "	1	S
R315	ERD25FJ221	220 " "	1	S
R316	ERD25FJ102	1 k " "	1	S
R317	ERD25FJ470	47 " "	1	S
R318	ERD25FJ153	15 k " "	1	S
R319	ERD25FJ562	5.6 k " "	1	S
R320	ERD25FJ152	1.5 k " "	1	S
R321	ERD25FJ104	100 k " "	1	S
R322	ERD25FJ470	47 " "	1	S
R323	ERD25FJ100	10 " "	1	S
R324	ERD25FJ102	1 k " "	1	S
R328	ERD25FJ102	1 k " "	1	S
R329	ERD25TJ104	100 k " "	1	S
R330	ERD25TJ104	100 k " "	1	S
R331	ERD25FJ153	15 k " "	1	S
		CAPACITORS (Value is in MICRO FARADS except P.P=PICO FARADS)		
C1	ECCD1H200KC	20 P 50V Ceramic	1	
C2	ECKD1H102MD	0.001 " "	1	
C3	ECKD1H102MD	0.001 " "	1	
C4	ECKD1H102MD	0.001 " "	1	
C5	ECCD1H100K	10 P " "	1	

Ref. No.	Part No.	Part Name & Description	Per Set	Remarks
C6	ECCD1H150KC	15 P 50V Ceramic	1	
C7	ECCD1H150KC	15 P " "	1	
C8	ECFVD683MD	0.068 25V Semi-Conductor	1	
C9	ECCD1H100K	10 P 50V Ceramic	1	
C11	ECFVD103MD	0.01 25V Semi-Conductor	1	
C12	ECKD1H103ZF	0.01 50V Ceramic	1	
C13	ECCD1H020C	2 P " "	1	
C14	ECFVD103MD	0.01 25V SemiConductor	1	
C15	ECCD1H050C	5 P 50V Ceramic	1	
C16	ECFVD223MD	0.022 25V Semi-Conductor	1	
C17	ECEA1CS330	33 16V Electrolytic	1	S
C18	ECKD1H103ZF	0.01 50V Ceramic	1	
C19	ECEA1AS221	220 10V Electrolytic	1	S
C20	ECEA1HS100	10 50V "	1	S
C21	ECFVD333MD	0.033 25V Semi-Conductor	1	
C22	ECFVD223MD	0.022 " "	1	
C23	ECFVD153MD	0.015 " "	1	
C24	ECFVD223MD	0.022 " "	1	
C25	ECEA50ZR1	0.1 50V Electrolytic	1	S
C26	ECFVD223MD	0.022 25V Semi-Conductor	1	
C27	ECEA1AS221	220 10V Electrolytic	1	S
C28	ECCD1H470KC	47 P 50V Ceramic	1	
C29	ECKD1H471KB	470 P " "	1	
C30	ECEA50Z1	1 " Electrolytic	1	S
C31	ECEA1AS101	100 10V "	1	S
C32	ECEA50Z1	1 50V "	1	S
C33	ECEA50ZR47	0.47 " "	1	S
C34	ECQS05681JZ	680 P " Styrol	1	
C35	ECEA50ZR22	0.22 " Electrolytic	1	S
C36	ECEA50ZR47	0.47 " "	1	S
C37	ECEA50Z3R3	3.3 " "	1	S
C38	ECFVD333MD	0.033 25V Semi-Conductor	1	
C39	ECFVD333MD	0.033 " "	1	
C40	ECEA50ZR1	0.1 50V Electrolytic	1	S
C41	ECEA50ZR1	0.1 " "	1	S
C42	ECFVD103MD	0.01 25V Semi-Conductor	1	
C43	ECBT1E103MMY	0.01 " Ceramic (Cylinder)	1	
C44	ECKD1H102MD	0.001 50V Ceramic	1	
C45	ECCD1H181K	180 P " "	1	
C47	ECCD1H331K	330 P " "	1	
C48	ECCD1H331K	330 P " "	1	
C101,201	ECEA50ZR1	0.1 " Electrolytic	2	S
C102,202	ECEA50ZR22	0.22 " "	2	S
C103,203	ECKD1H152MD	0.0015 " Ceramic	2	
C104,204	ECEA50Z1	1 " Electrolytic	2	S
C105,205	ECKD1H102ZF	0.001 " Ceramic	2	
C106,206	ECEA50Z1	1 " Electrolytic	2	S
C107,207	ECEA50ZR33	0.33 " "	2	S
C108,208	ECKD1H222MD	0.0022 " Ceramic	2	
C109,209	ECEA50Z1	1 " Electrolytic	2	S
C110,210	ECKD1H102ZF	0.001 " Ceramic	2	
C111,211	ECEA50Z1	1 " Electrolytic	2	S
C112,212	ECCD1H221K	220 P " Ceramic	2	
C113,213	ECEA50ZR22	0.22 " Electrolytic	2	S
C115,215	ECEA50Z1	1 " "	2	S
C116,216	ECEA50ZR1	0.1 " "	2	S

Ref. No.	Part No.	Part Name & Description	Per Set	Remarks
C117,217	ECEA1HS100	10 50V Electrolytic	2	S
C118,218	ECQS05153MZ	0.015 " Polyester	2	
C119,219	ECEA50Z1	1 " Electrolytic	2	S
C120,220	ECKD1H102MD	0.001 " Ceramic	2	
C121,221	ECFVD333MD	0.033 25V Semi-Conductor	2	
C122,222	ECEA50ZR1	0.1 50V Electrolytic	2	S
C123,223	ECKD1H102MD	0.001 " Ceramic	2	
C124,224	ECEA50Z1	1 " Electrolytic	2	S
C125,225	ECBT1H222MMY	0.0022 " Ceramic(Cylinder)	2	
C126,226	ECKD1H471KB	470 P " Ceramic	2	
C127,227	ECEA1AS470	47 10V Electrolytic	2	S
C128,228	ECCD1H100K	10 P 50V Ceramic	2	
C129,229	ECEA1AS101	100 10V Electrolytic	2	S
C130,230	ECQS05224JZ	0.22 50V Polyester	2	
C131,231	ECEA0JS102	1000 6V Electrolytic	2	S
C301	ECEA50Z1	1 50V Electrolytic	1	S
C302	ECCD1H181K	180 P " Ceramic	1	
C303	ECKD1H102ZF	0.001 " "	1	
C304	ECEA50Z1	1 " Electrolytic	1	S
C305	ECEA1AS221	220 10V "	1	S
C306	ECEA1AS221	220 " "	1	S
C307	ECEA1AS470	47 " "	1	S
C308	ECQS05681JZ	680 P 50V Styrol	1	
C309	ECQG05103MZ	0.01 " Polyester	1	
C310	ECEA1AS221	220 10V Electrolytic	1	S
C311	ECFVD223MD	0.022 25V Semi-Conductor	1	
C312	ECEA0JS471	470 6V Electrolytic	1	S
C313	ECEA0JS471	470 " "	1	S
C314	ECEA1CS330	33 16V "	1	S
C315	ECEA1AS101	100 10V "	1	S
C316	ECEA1CS222	2200 16V "	1	S
C317	ECKD1H103ZF	0.01 50V Ceramic	1	
C318	ECKD1H103ZF	0.01 " "	1	
C319	ECKD1H103ZF	0.01 " "	1	
C320	ECKD1H103ZF	0.01 " "	1	
C321	ECEA1CS330	33 16V Electrolytic	1	S
C322	ECKD1H102ZF	0.001 50V Ceramic	1	
C323	ECEA1HS100	10 " Electrolytic	1	S
C324	ECCD1H181K	180 P " Ceramic	1	
C325	ECEA50Z3R3	3.3 " Electrolytic	1	S
C326	ECFVD103MD	0.01 25V Semi-Conductor	1	
C327	ECCD1H331K	330 P 50V Ceramic	1	
C328	ECCD1H331K	330 P " "	1	
C329	ECKD1H102ZF	0.001 " "	1	
		ELECTRICAL PARTS		
E1	XSN3+8S	Screw, + 3x8	2	S
E2	RJM142Z	Built-in Microphone	2	
E3	RZAX5180N	Dial Chassis Ass'y	1	
E3-1	RDR21-1	Pulley, Dial	1	
E3-2	RDY43Z	Shaft, Dial Pulley	2	
E3-3	RDR26Z	Pulley, Dial	1	
E3-4	RDX1009Z	Shaft, Tuning	1	
E3-5	XUC2FT	Circlip	1	S
E4	RKE372Y	Board, Jack	1	
E5	RKD569Y	Scale, Dial	1	

Ref. No.	Part No.	Part Name & Description	Per Set	Remarks
E6	RDP822Z	Pointer	1	
E7	RDD569Z	Drum, Dial	1	
E8	RDS4090A	Spring, Dial Drum	1	
E9	RDZ05A	Cord, Dial (100cm)	1 ROLL	
E10	RUV615Z	Holder, Switch Cover	4	
E11	RUV616Z	Cover, Switch	4	
E12	RHG2006Z	Cover, Microphone	2	
E13	RMC607Z	Shield Plate, IC	1	
E14	RMP156Z	Holder, LED	1	
E15	RJS185Z	Socket, 3P	1	
E16	RJS186Z	" 4P	2	
E17	RJP231Z	Plug, 3P	1	
E18	RJP232Z	" 4P	2	
E19	RJP134Z	Plug, Test Point	1	
E20	RJT707Z	Contact	11	
E21	RMS12B	Plate, Speaker Holding	8	
E22	RUV482Z	Cover, AC Socket	1	⚠
E23	RUL639Z	Angle, Mechanism	1	
E24	XSN3+10S	Screw, + 3x10	2	S
E25	XWG3	Washer	4	S
E26	XTV3+10G	Screw, + 3x10	12	
E27	XTV3+14G	" + 3x14	1	
E28	XSN26+8	" + 2.6x8	1	S
E29	XWA26B	Washer	1	S
E30	XTV3+10GR	Screw, + 3x10	6	
E31	XTV3+8GR	" + 3x8	1	
E32	XTN3+30CR	" + 3x30	3	
		CABINET PARTS		
K1	RYMX5180M8	Front Cabinet Ass'y	1	
K1-1	RYQX5180N	Cassette Lid Ass'y	1	
K1-2	RKH105Z	Handle	1	
K1-3	RKX184Z	Washer, Handle	2	
K1-4	RKX221Z	Arm, Handle	2	
K1-5	QBP1817	Spring, Handle	2	
K1-6	XTC3+8CFN	Screw, + 3x8	2	
K2	RYFX5180M7	Rear Cabinet Ass'y	1	
K2-1	RJC609Z	Terminal, Battery +, - Side	1	
K3	RYNX5180N7	Battery Cover Ass'y	1	
K4	XEAQCR228FAK	Telescopic Antenna	1	
K5	RJT746Z	Terminal, Antenna	1	
K6	RUS429Z	Spring, Cassette Lid	1	
K7	RDG5690Z	Gear	1	
K8	RME258Z	Holder, Gear	1	
K9	RUL636Z	Angle, Lock Lever	1	
K10	RUB244Z	Lever, Lock	1	
K11	RDS2041Z	Spring, Lock Lever	1	
K12	RBN559Z	Knob, Tuning	1	
K13	RBN488W	Knob, Tone, Volume, Balance	3	
K14	RBN488U	Knob, Mixing MIC	1	
K15	RBS178Z	Knob, Lever	4	
K16	RJC610Z	Terminal, Battery, - Side	1	
K17	RJC107-1	Terminal, Battery, + Side	1	
K18	XSB3+12BN	Screw, + 3x12	1	
K19	XTV3+10G	" + 3x10	4	

Ref. No.	Part No.	Part Name & Description	Per Set	Remarks
K20	XTB3+10CFN	Screw, + 3x10	1	
K21	XTW3+8L	" + 3x8	3	
K22	XTB3+40CFN	" + 3x40	4	
		ACCESSORY		
A1	RJA22Y	AC Cord	1	⚠
		PACKING MATERIALS		
P1	RPK1074Z	Gift Box	1	
P2	RPN9361Z	Pad Complete (L, R Side)	1	
P3	XZB25X50A01	Poly Bag	1	
P4	RPN3319Z	Pad	1	
		PRINTED MATERIAL		
Y1	RQX6679Z	Instruction Book	1	

■ PACKING MATERIALS

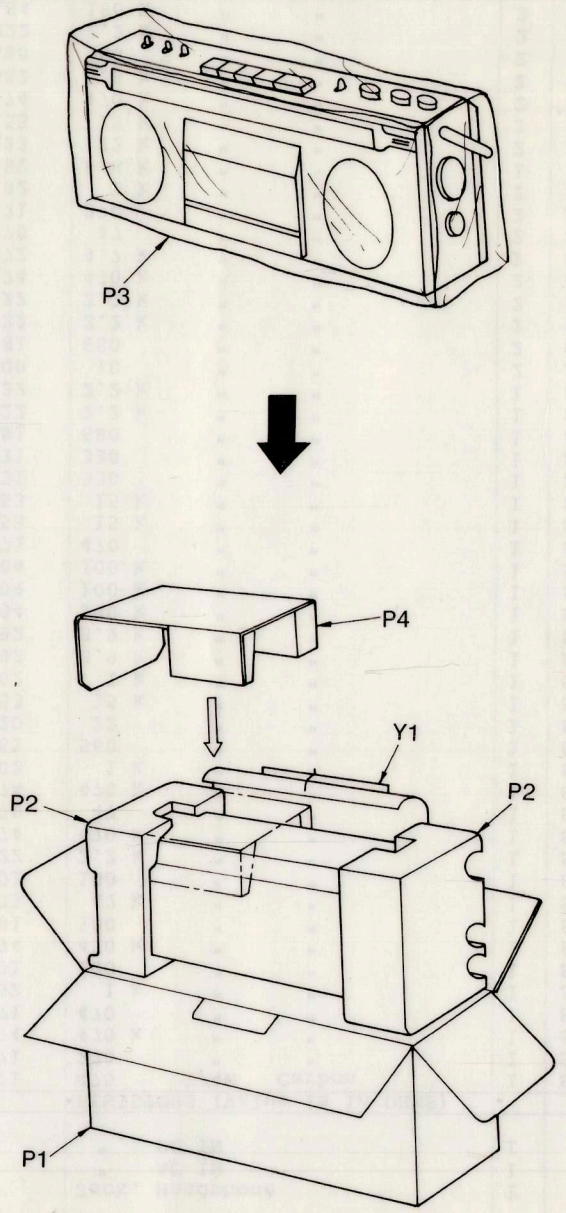

Fig. 26

RD Ⓕ M
Printed in Japan